Additional Sensor and Compute Mounting CAD Submission – Supplementary Information

System Overview

Formula Trinity's hardware system is designed to be modular and easy to assemble and replace parts, allowing for speed and ease of repair of components as well as keeping the base plate organized and prepared for most weather conditions. All screws that could require quick access are M6 screws, with nuts embedded into each module excluding components purchased with pre-threaded holes. The additional sensor mount is comprised of 4 modules:

1. The Compute Module
2. The Power Control Module
3. The Camera Module
4. The Lidar

1 The Compute Module

The compute module is housed within a weatherproof box, dubbed 'Lunchy' as it was directly designed to mimic the ease of use and style of a lunchbox. The box is 3d printed in 4 components: the base, the main body, the back, and the lid/roof.

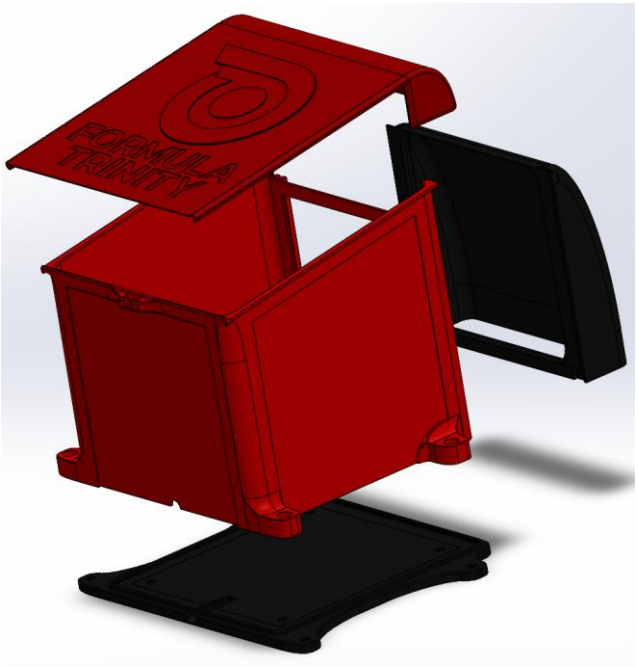

(Figure 1: Compute box shell exploded view)

These parts are 3d printed in PETG, giving us a low-cost easy to replace design while also ensuring that the box will keep the computer inside sheltered from rain, and the PETG will withstand any external heat up to 80 degrees Celsius. Internally, the back of Lunchy has two separate large open areas to ensure hot and cold air continues to cycle the system.

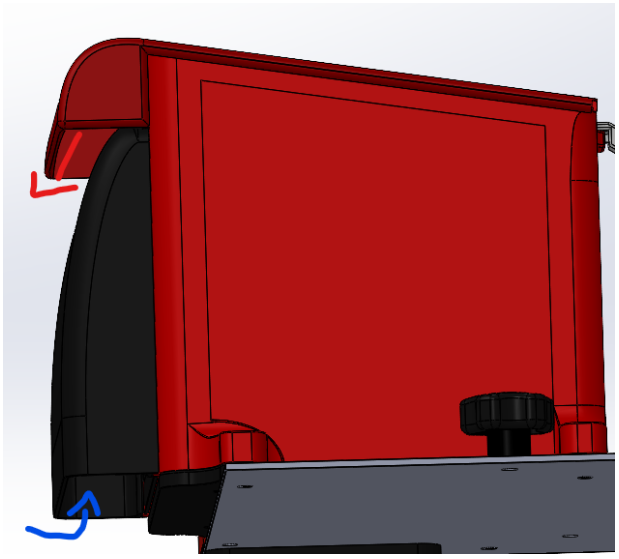

(Figure 2: Compute box indicating airflow)

The top lid of Lunchy is a securely fit sliding mechanism giving quick access to the components stored within the compute module. The back panel is designed to allow for it to slide up in a similar fashion,

with all compute components' I/O ports facing towards this exit.

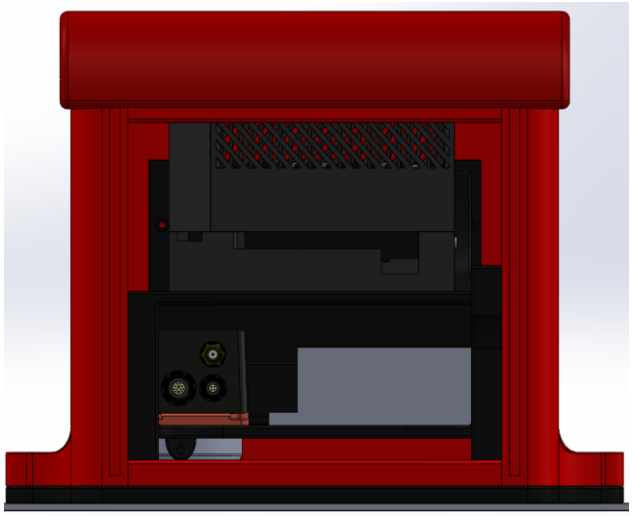

(Figure 3: Rear view of compute box with back panel removed)

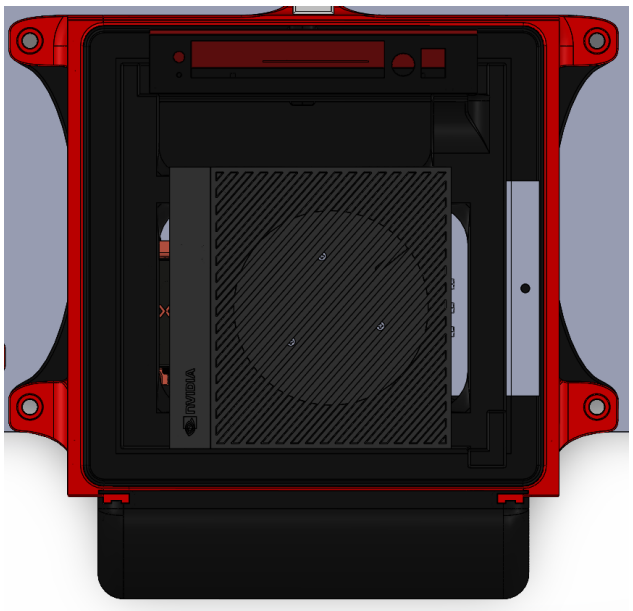

(Figure 4: Top view of Compute Box with lid removed)

During dry weather conditions these panels can be removed to allow for greater airflow to the computer.

The components stored within Lunchy are:

1. Jetson AGX Orin,
2. Xsens MTI680g RTK GNSS/INS GPS,
3. ANT-GNSS-RTK antenna,
4. 4 port router (without antennae),
5. LiDAR interface box.

These are securely attached to a computer rack bolted to the base of Lunchy.

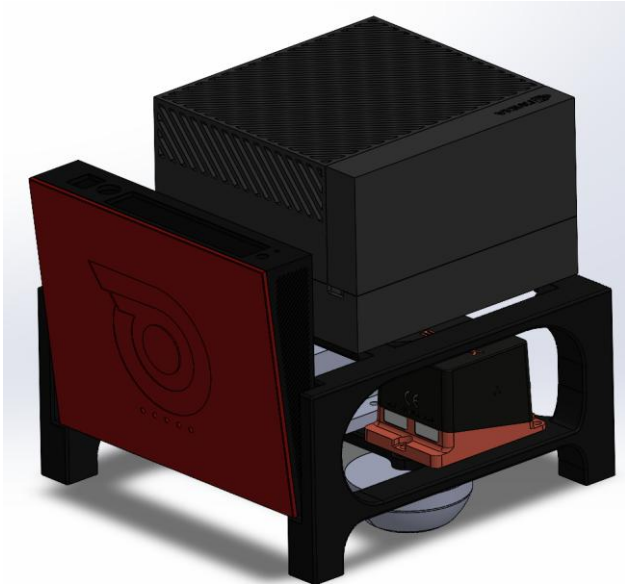

(Figure 5: Internal view of Compute Box)

2 The Power Control Module

The power control module is a switch box situated on the back left of the mounting plate with two switches and one power converter. The power connector from the DDT car is split into three power connectors, each connecting to a male terminal on the switch box. One switch feeds to the Jetson computer and the other goes to the LiDAR. The power converter steps the supply to 5 V before feeding it to the router.

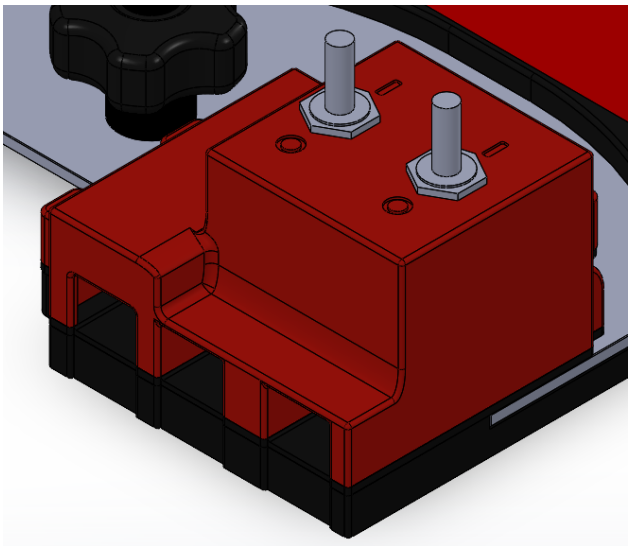

(Figure 6: Switch Box)

The switch overhangs the build plate but remains securely attached by clamping on a part on the under-

side of the plate designed to ensure structural integrity across the switch box.

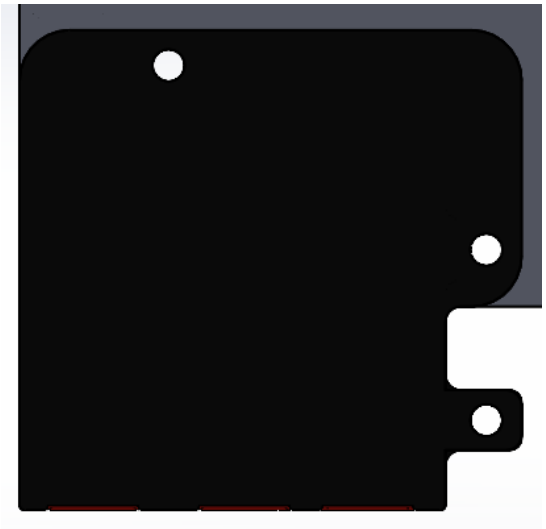

(Figure 7: Underside of Switch Box)

3 The Camera Module

The camera module relies on the Zed2i stereo camera which is mounted to a PETG 3d print. There print has two legs elevating the cameras to sit approximately 10cm above the base plate as well as an additional support leg keyhole connected to the front of the compute module for additional support to the camera.

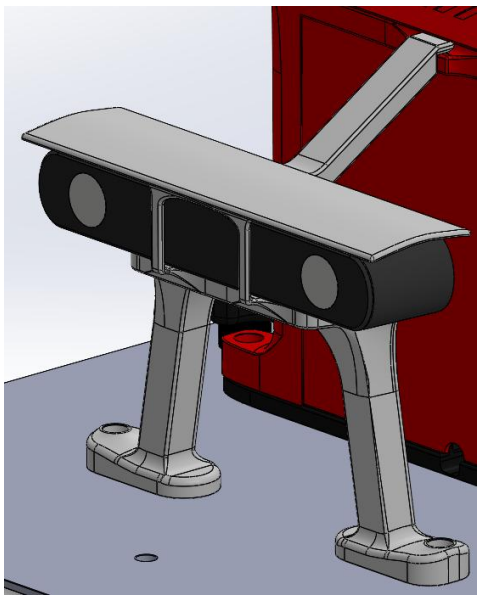

(Figure 7: Camera Module)

The wire for the Zed2i feeds into an access port near the base of the compute module to keep wiring secure and discrete. This access port is also used to feed the LiDAR wiring to the LiDAR interface box.

4 The LiDAR

The VLP-16 LiDAR is mounted directly to the mounting plate with an M7 screw along with 2 M3 guide holes. The wire for the LiDAR feeds into an access port near the base of the compute module.

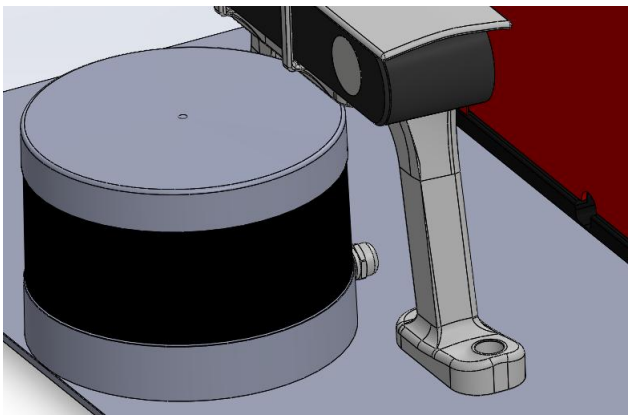

(Figure 8: LiDAR on Mount)

See next page for '5. The Surface Envelope', showing compliance of rule T1.3.3.

5 The Surface Envelope

Our designs were completed in SolidWorks, and as such the .step file provided deletes the sketch outlining our compliance with the surface envelope. A SolidWorks assembly is also attached for convenience if people reviewing our CAD submission have SolidWorks installed. Below are figures outlining the compliance.

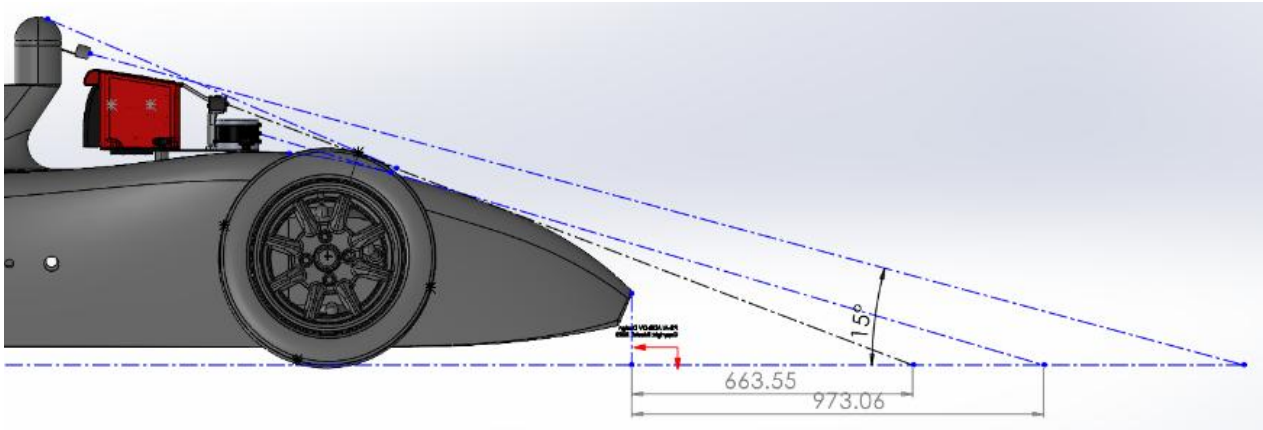

(Figure 8: Side Profile of car with Surface Envelope and sensor Line of Sight visible)

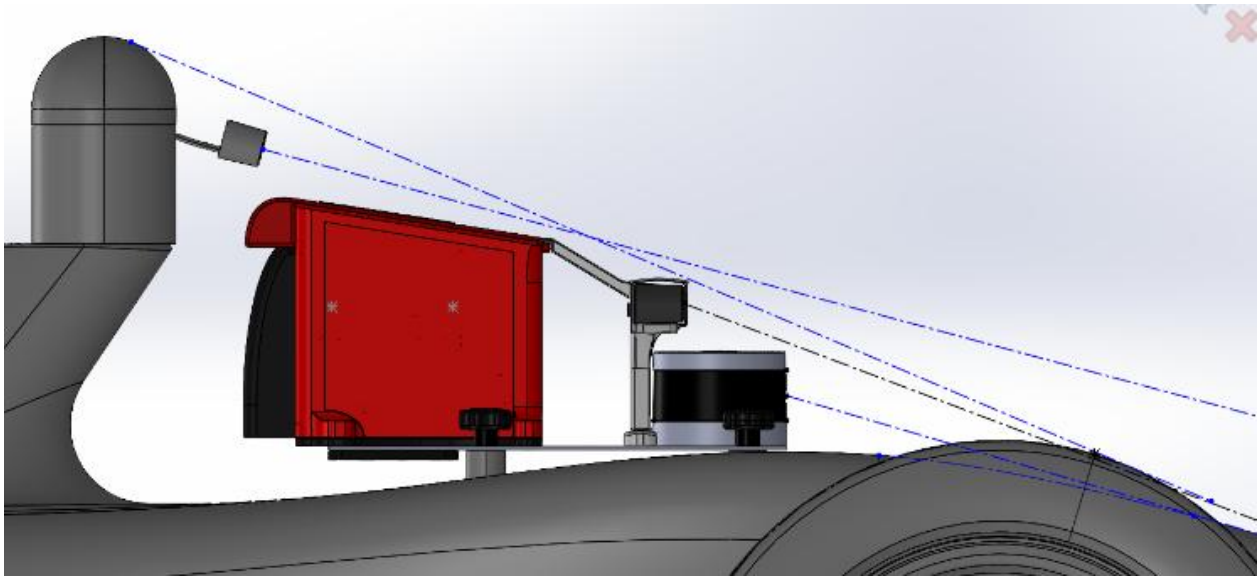

(Figure 9: Closeup of Fig. 8 focused on the Sensor Mount)

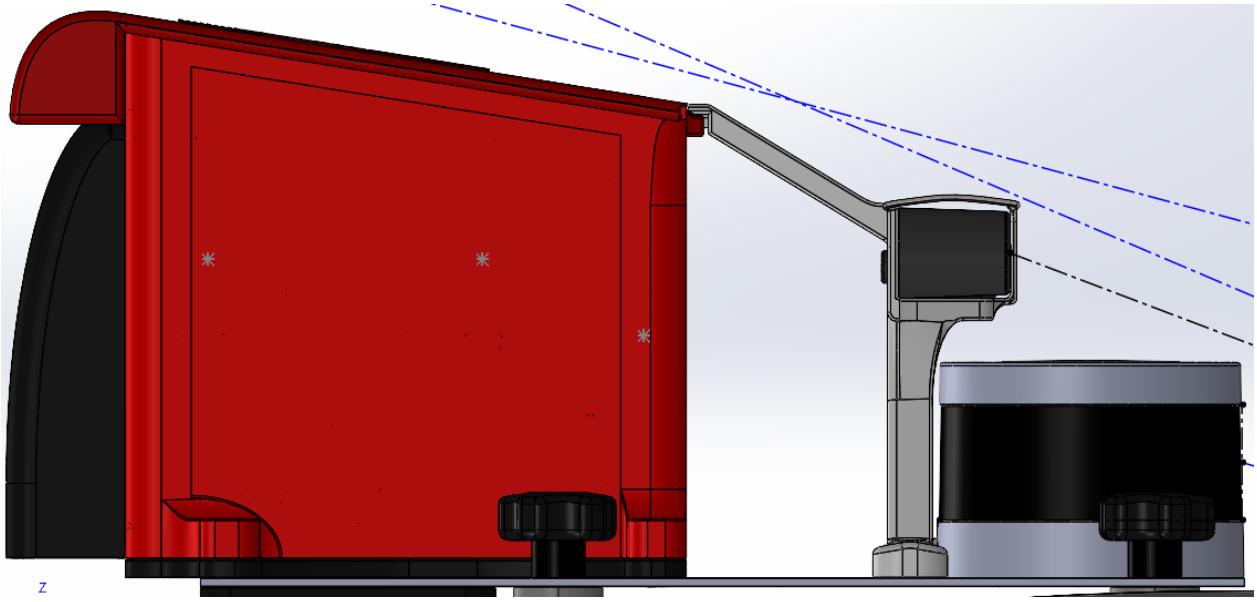

(Figure 10: Further closeup of Fig. 8 showing clearance of surface envelope)

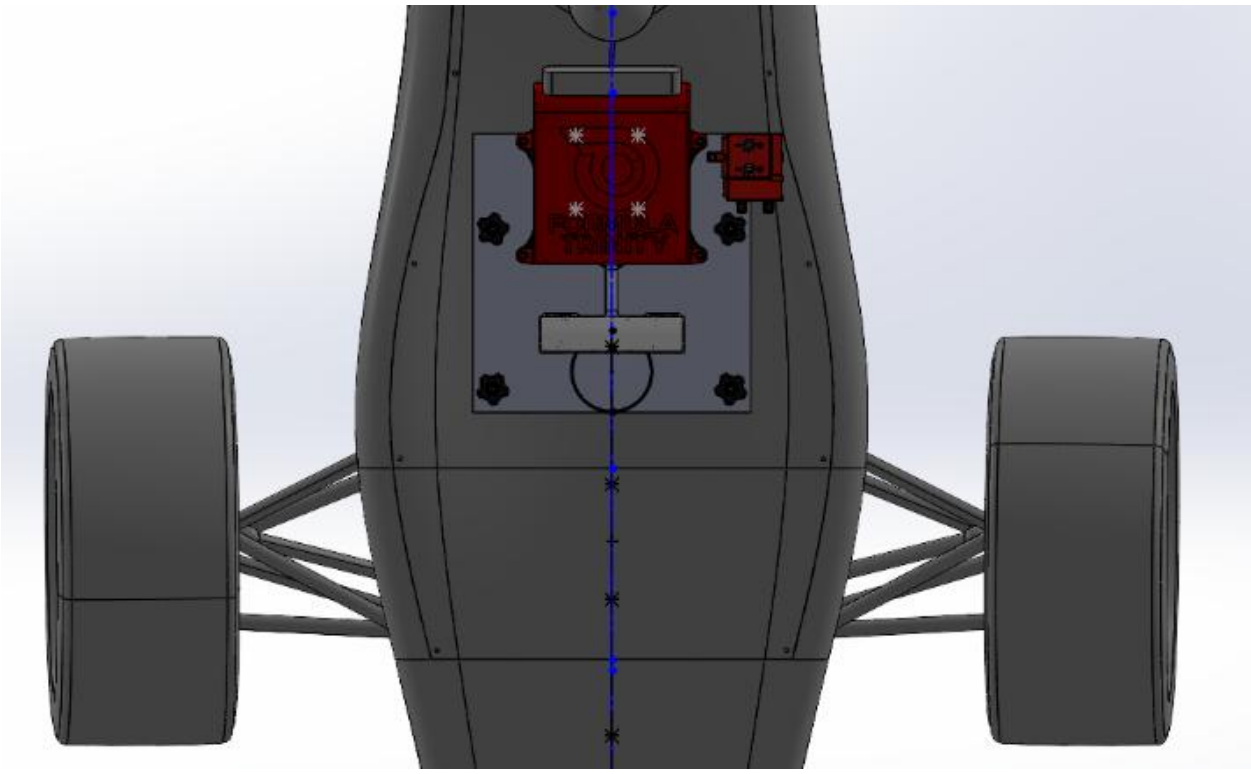

(Figure 11: Overhead view of DDT car + Formula Trinity Additional Sensor Mount Assembly)